BEARING CORP. LTD.

SIGMA ESA 20 0644 thrust ball bearings

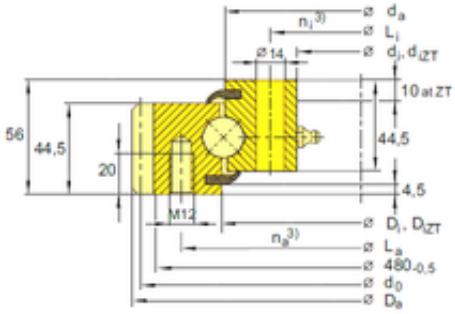

ESA 20 0644 Bearing 2D drawings and 3D CAD models

Bearing No. ESA 20 0644

Bore Diameter	572 mm
Outer Diameter	742,3 mm
d	572 mm
D	742,3 mm
Da	742,3 mm
Z	122 mm
m	6 mm
di	572 mm
diZT	574 mm
Di	645,5 mm
DiZT	647 mm
da	642,5 mm
La	685 mm
na	32 mm
ni	36 mm
Li	598 mm
d0	732 mm